6” Fresnel Pendant House Light Series

THE LIGHT SOURCE INC

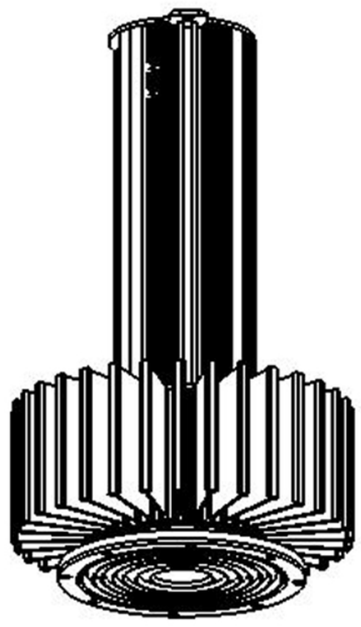

2,000 to 8,200 Lumens Output

APPLICATIONS
The Light Source 6” Fresnel pendant house light is perfect for applications requiring excellent dimming, tight beam control, and a high quality of light. The luminaire provides the look and feel of the natural, single source incandescent light, as well as excellent LED performance and longevity. It is a great choice for atriums, auditoriums, churches, museums, schools, studios, theaters, and similar locations.

ELECTRICAL
The LED driver has a universal input of 100VAC to 277VAC 50/60 HZ with no adjustments required, and a mean time between failures of 330,000 hours. The LED driver has active power factor correction with 99%PF at 120VAC, ATHD of 7%, and draws only 0.84 amps. The 150 Watt LED driver is tuned down to 100 wall plug Watts to further improve the life and reliability of the LED fixture.
In rush current is limited, allowing up to 12 of the 100 Watt LED fixtures on a single 20 Amp 120 VAC circuit breaker. The LED light fixture responds quickly, producing full light output within 2-3 seconds after power is applied. **Relays are not required to turn The Light Source fixtures off beween uses.** The fixtures are fully rated for 24/7/365 operation. This enables the lights to instantly respond to the DMX signal without waiting for relays to sequence and fixture boot time. Standby wattage is less than 2 Watts (1.6W) with power on and DMX at level 0. The annual phantom power consumption is only 14 KWH, about a dollar per fixture per year.

CONNECTIONS
Power connections may be hard wired with the provided flip lever WAGO connectors, or with the optional flush mounted external Neutrik PowerCon, or with 72” 18/3 wire whip. The optional DivCon System divides power and data into separate compartments in the mounting box and on into the fixture through divided paths in the DivCon conduit. DMX data connections may be hard wired with the provided internal IDC or screw terminal plug in connectors; or the optional external flush mounted Neutrik 5 pin XLR; 3 pin XLR; or RJ-45 Ethercon connectors. Optional LumenRadio wireless DMX is also available to provide the control data for the fixture.

CONTROL
The fixtures are fully DMX dimmable with extremely smooth 24 bit dimming utilizing only 8 bit dimming control. The dimmer microprocessor is able to use over 16 million steps from full on to full off for incredibly smooth dimming. There is absolutely no flicker on video with either line scan or global camera shutters interacting with the 30kHz PWM frequency. The DMX unit is fully isolated to 2500 Volts per microsecond. The Light Source proprietary Thermal Mass Equivalence may be enabled by turning dip switch 1 “OFF” to allow control channel 512 to change the dimming performance to emulate large or small incandescent lamps or to change the dimming performance to an instant response. The fixture is also available in a non-dimming version.

STANDARD LED MODULE
Utilizing 60 Cree LED’s operating at 100 wall plug Watts, the standard LED module offers over 50,000 hours of LED life to L70. After 50,000 hours, the the module will still provide 70% of its initial lumen output. The individual LED’s are driven at 523 milliwatts and are rated for 1500 milliwatts. Cree LED’s have a pleasing full spectrum light output will all the colors represented. The individual LED’s are carefully factory selected to maintain less than two McAdams color variance in each LED module. The white LED’s are available in 2700K, 3000K, 3500K, 4000K, and 5600K; and in either 80+CRI, 88+CRI or 90+CRI. The LED module is factory built on a copper PCB for maximum thermal and optical performance. Every LED module is thermal imaged to verify all electrical and thermal bonding connections. LED color bins used in each LED module are recorded with the fixture serial number. No appreciable IR or UV is produced by the LED module. Extreme heat and cold ambient temperatures do not adversely affect the LED output. The LED module is field replaceable utilizing normal hand tools.

RGBW LED MODULE
The Light Source RGBW four-color pendant house light offers incredibly rich color as well as a beautifully crafted white. High output combines with low wattage to create a quality, maintenance-free, and energy effficient luminaire. Using only 120 hot wall plug Watts, the fixture puts out over 8,000 lumens of white light which is created with 36 Cree white LED’s. The colors are created with a mix of 117 Cree red, blue, and green LED’s; and can be combined to make any color using up to 120 Watts of the RGBW LED’s. This fixture is available in 78, 65, and 52 degree beam angles. The typical LED frequency and color purity is: Red 620-625nm and 99%cp, Blue 450-455nm and 93%cp, Green 520-530nm and 82%cp. The white LED’s are available in 2700K, 3000K, 3500K, 4000K, and 5600K; in either 80+CRI or 90+CRI.

OPTICAL
Optical systems are available in 78, 65, 52, 44, 36, 30, 25, and 20 degree beam angles. Sixty tightly clustered Cree LED’s and a 6” tempered borosilicate Fresnel lens combine to provide a single source look that completely emulates an incandescent source. Efficient use of the lumens generated by the LED cluster module is accomplished by directing the LED output to the task area. An additional condenser lens is utilized to maximize the lumen output on the 52 degree and tighter beam spreads.

THERMAL
The maximum ambient operating temperature is 122 degrees F (50 degrees C). With no fans or other devices to generate noise, the fixture is silent in operation. A huge, passive, convection-cooled, aluminum composite heat sink has plenty of space between fins to maximize the heat exchange and airflow, which keep the 60 Cree LED’s junction temperatures maintained at a delta of 25 degrees C above ambient. The solid copper LED PCB is thermally bonded to the aluminum core with an 85 W/mK thermal interface material, effectively providing a complete metal to metal thermal interface that improves over time. Most thermal interface materials provide less than 10 W/mK of thermal transfer. The LED junction temperature operates 75 degrees C cooler than its maximum junction temperature of 150 Degrees C, producing significantly higher LED brightness and longer life.

MOUNTING
The fixture can be mounted with the following options: The Light Source proprietary DivCon divided power and data conduit and box; 1/2” rigid conduit; 3/8” or 1/2” fastener or threaded rod; a Mega-Clamp; a purlin clamp; or a 1/8” aircraft cable.

FINISH
The extruded aluminum LED fixture comes in a black anodized finish. Optional anodized colors are also available. The accessory cylinders and square housings are available in standard black or white powder coat finish, but may be custom finished in any RAL powder coated color.

AGENCY RATING
ETL listed in the US and Canada.

WARRANTY
10 year parts replacement on complete LED fixture and electronics. Simply ship the LED fixture to the factory freight prepaid. The LED fixture will be repaired or replaced at the factory’s discretion and returned freight prepaid. Fixture repair parts may also be sent for qualified repairs onsite.

E-mail: LED@thelightsource.com Web site: www.thelightsource.com Phone: 704-504-8399 Address: 3935 Westinghouse Blvd, Charlotte, NC 28273 [V150225]

Photometric Data

THE LIGHT SOURCE INC

Fixture Power and Beam Angle	Wall Plug Hot Watts	Photometrics Beam	Field	Lumens	Lum/Watt	Distance to Diameter	Candela	Intensity and Beam diameter on floor in feet at different mounting heights in feet											
								Mounting Height	8	10	12	15	20	25	30	35	40	45	50
100 Watt 78 Degree	100	78	91	7,965	80.19	1.62	5,550	**Footcandles**	87	56	39	25	14	9	6	5	3	3	2
								Beam Diameter	13	16	19	24	32	40	49	57	65	73	81
100 Watt 65 Degree	100	65	78	7,900	78.48	1.40	7,192	**Footcandles**	112	72	50	32	18	12	8	6	4	4	3
								Beam Diameter	11	14	17	21	28	35	42	49	56	63	70
100 Watt 52 Degree	100	52	74	8,211	81.75	0.98	11,006	**Footcandles**	172	110	76	49	28	18	12	9	7	5	4
								Beam Diameter	8	10	12	15	20	24	29	34	39	44	49
100 Watt 44 Degree	100	44	62	7,945	79.16	0.81	15,152	**Footcandles**	237	152	105	67	38	24	17	12	9	7	6
								Beam Diameter	6	8	10	12	16	20	24	28	32	36	40
100 Watt 36 Degree	100	36	52	7,677	76.32	0.65	20,453	**Footcandles**	320	205	142	91	51	33	23	17	13	10	8
								Beam Diameter	5	6	8	10	13	16	19	23	26	29	32
100 Watt 30 Degree	100	30	44	7,526	75.01	0.54	28,356	**Footcandles**	443	284	197	126	71	45	32	23	18	14	11
								Beam Diameter	4	5	6	8	11	13	16	19	21	24	27
100 Watt 25 Degree	100	25	37	7,129	70.84	0.44	36,039	**Footcandles**	563	360	250	160	90	58	40	29	23	18	14
								Beam Diameter	4	4	5	7	9	11	13	15	18	20	22
100 Watt 20 Degree	100	20	30	6,555	65.25	0.35	45,358	**Footcandles**	709	454	315	202	113	73	50	37	28	22	18
								Beam Diameter	3	4	4	5	7	9	11	12	14	16	18

Beam angle is to 50% of center intensity, Field angle is to 10% of center intensity. 3000 Degrees Kelvin, Minimum 80 CRI, Typical 82 CRI,
Universal Power Input 100-277VAC - 100 Watts wall plug Ratings: 120V .82 amps .99 PF, 208V .5 amps .95 PF, 240V .44 amps .92 PF, 277V .4 amps .86 PF
The Light Source fixtures are available in 2700K, 3000K, 3500K, 4000K, and 5600K. - LED Light Engines 2700K - 4000K have the same lumen output.

The 120 Watt RGBW fixture has approximately the same Lumen output as the 100 Watt white fixtures in 78, 65, and 52 degree only

Fixture Wattage	30	40	60	80	100	120
Lumen/Intensity Multiplier	0.31	0.39	0.54	0.84	1.00	1.15

Catalog Numbers

Example: HL100B78-30CXP-C

FIXTURE SERIES	HOT WALLPLUG WATTAGE	FINISH	OPTICAL BEAM ANGLE	-	LED COLOR TEMPERATURE
HL Pendant	120	B Black Anodized	78 78° 6" Fresnel lens		27 2700K
	100	C Custom Color	65 65° 6" Fresnel lens		30 3000K
	80		52 52° 6" Fresnel lens		35 3500K
	50		44 44° 6" Fresnel lens		40 4000K
	40		36 36° 6" Fresnel lens		56 5600K
	30		30 30° 6" Fresnel lens		
			25 25° 6" Fresnel lens		
			20 20° 6" Fresnel lens		

POWER CONNECTION	DATA CONNECTION	FIXTURE SUPPORT METHOD	-	CRI OR SECOND COLOR
C Conduit into fixture 100V to 277V	D DivCon System	C 1/2" Rigid Conduit		(Blank) Typical 82 CRI
D DivCon system 100V to 277V	I IDC Plug on Header	D DivCon System		C Typical 88 CRI
P Panel Mount Powercon. 100V to 250V	J Neutrik RJ-45's	K 1/8" Wire Rope		E Typical 92 CRI
R 1/2" Romex cable clamp 100V to 277V	N Non dimming fixture - no data	M Mega-Clamp		27K Second color white 2700K
W 18/3 SJO 72" wire whip 100V to 277V	T Screw Terminal Plug on Header	P Purlin Clamp		30K Second color white 3000K
	W Wireless Lumen Radio Control	U 1/2" Adapter Post		35K Second color white 3500K
	X Neutrik 5 Pin XLR's	V 3/8" Adapter Post		40K Second color white 4000K
	Z Neutrik 3 Pin XLR's			56K Second color white 5600K
				RGB RGB-W

Fixture Support Methods

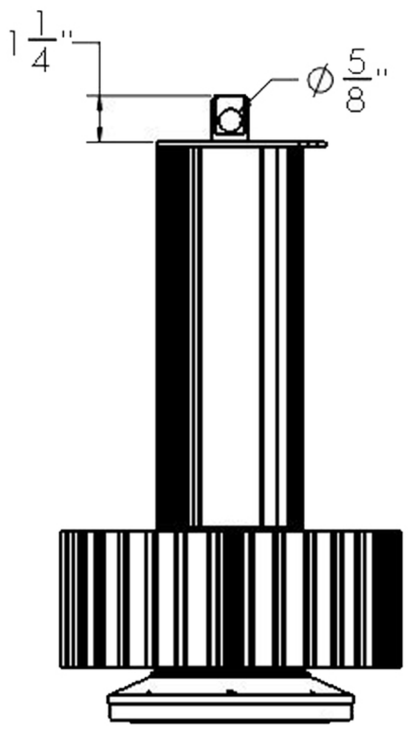

Adapter Post
(V) 3/8", (U) 1/2"

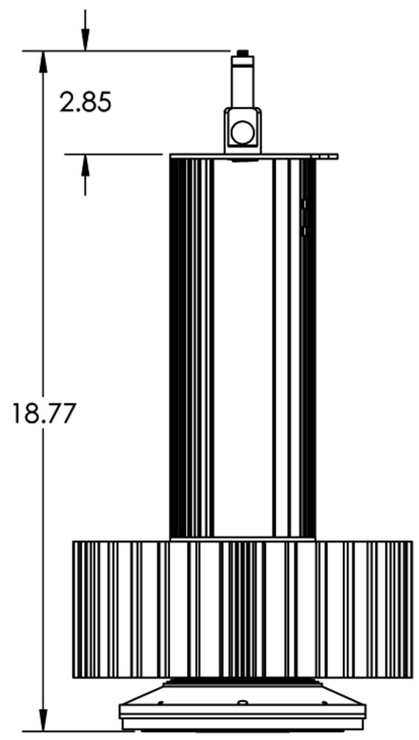

1/8" Aircraft Cable (K)

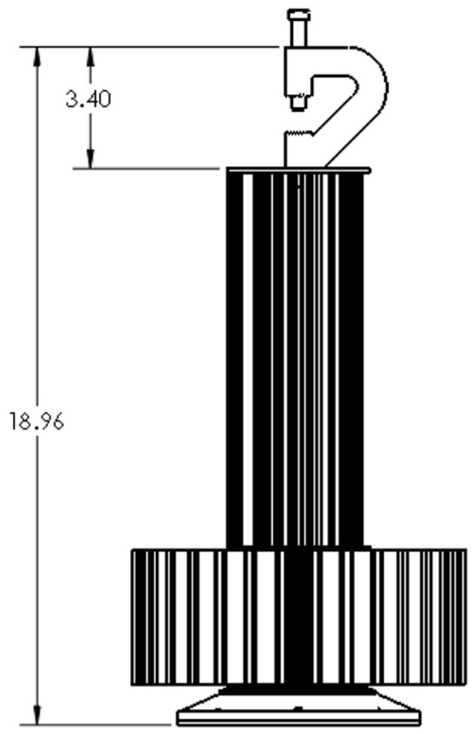

Purlin Clamp (P)

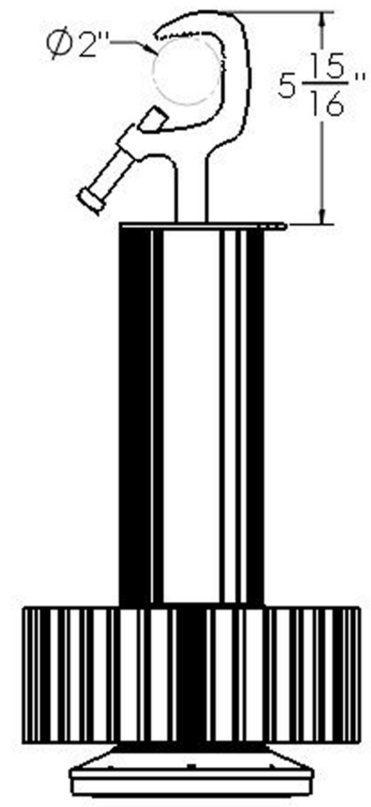

Mega-Clamp (M)

DIV-CON

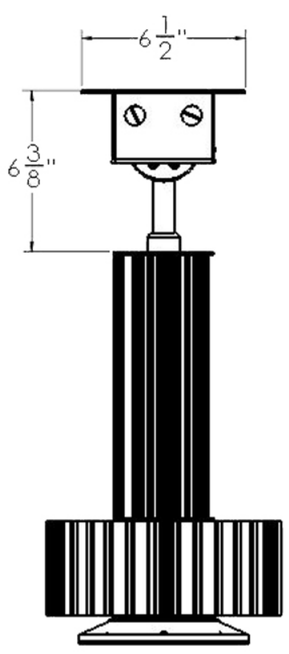

Optional Pivoting Div-Con (DDD)

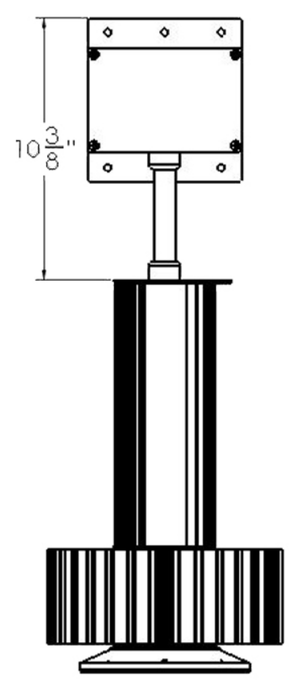

Optional 90° Div-Con (DDD)

The DivCon system provides separate paths for the high voltage power and the low voltage DMX Data. The DivCon installation box has eight 1/2" or 3/4" conduit fitting entry points--four for power and four for DMX data. The installation box's internal divider keeps the high voltage wiring separated from the DMX data wiring. The aluminum divider barrier is made of two components: the retainer and the swiveling DivCon disk conduit holder. The disk has openings for power on one side and data on the other, and clam shells around the DivCon divided conduit providing continuous separated paths. In the pivoting Div-Con, the disk can swivel +/- 45 degrees from vertical. The DivCon installation box is also available with optional external flush mounted connectors for power and data. PowerCon in and through connectors may be selected for 100-250VAC power connections. 5 pin XLR, 3 Pin XLR, or Ethercon (RJ-45) in and through connectors may be selected for data connections.

Accessories

GLARE SHIELDS

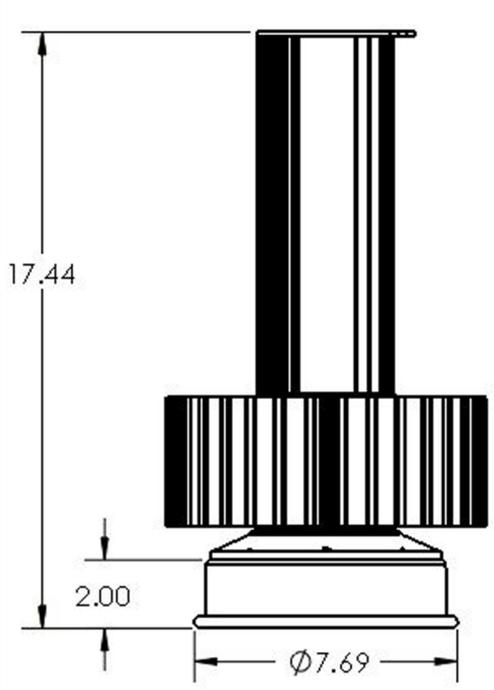

Optional Straight
Glare Shield

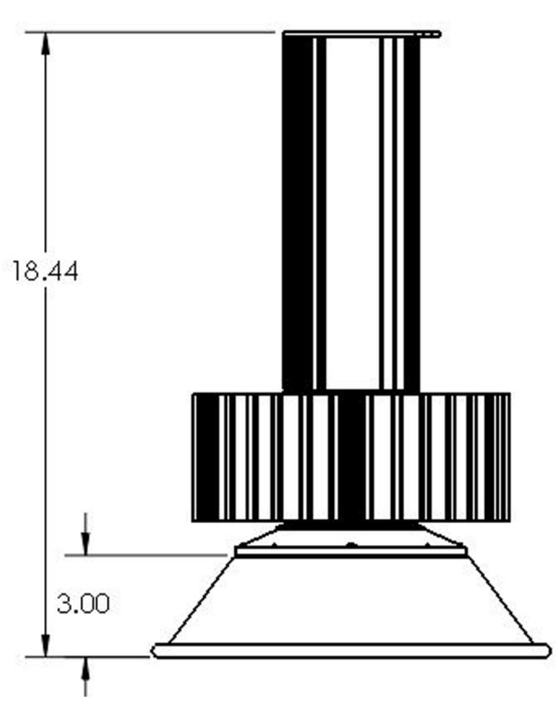

Optional Flared
Glare Shield

THE LIGHT SOURCE DMX CABLE

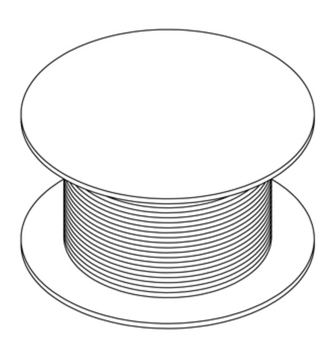

The Light Source full specification DMX cable will save installation time.
1,000' Spool

ENCLOSURES

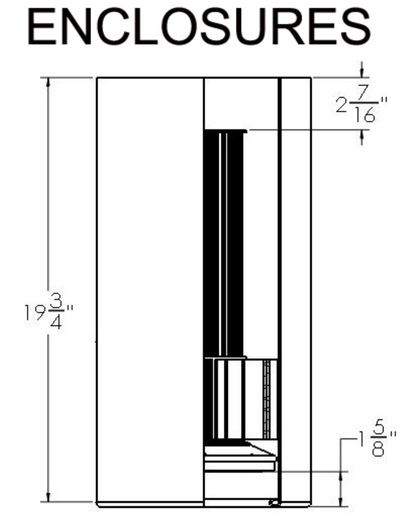

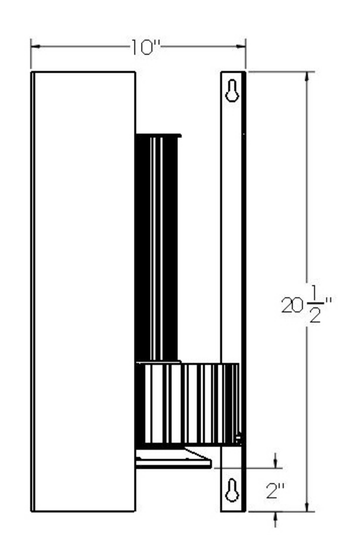

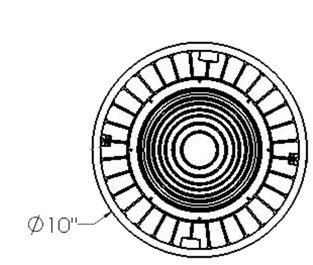

Optional
Cylinder Enclosure

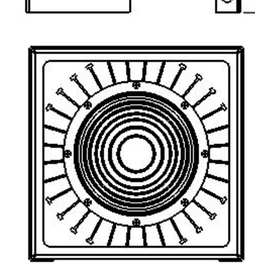

Optional
Rectangular Enclosure

E-mail: LED@thelightsource.com Web site: www.thelightsource.com Phone: 704-504-8399 Address: 3935 Westinghouse Blvd, Charlotte, NC 28273 [V150225]

PHOTOMETRIC DATA

THE LIGHT SOURCE INC

Pendant House Light
78° Beam Angle

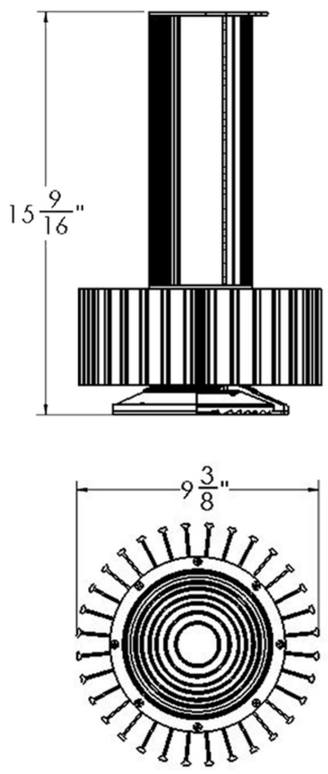

IES FLOOD REPORT
PHOTOMETRIC FILENAME : L101404101R01.IES

AXIAL CANDELA DISPLAY

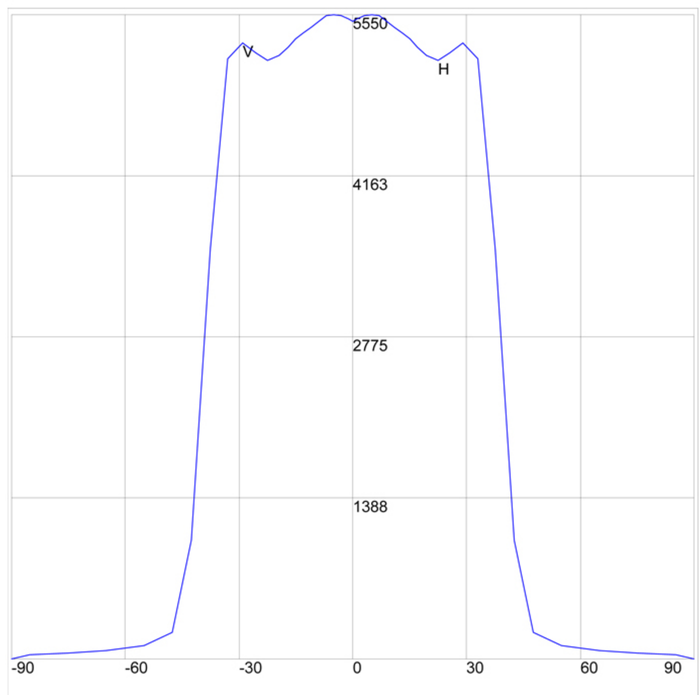

Maximum Candela = 5550 Located At Horizontal Angle =-5, Vertical Angle =-1
H - Horizontal Axial Candela
V - Vertical Axial Candela

IES FLOOD REPORT
PHOTOMETRIC FILENAME : L101404101R01.IES

ISOCANDELA CURVES

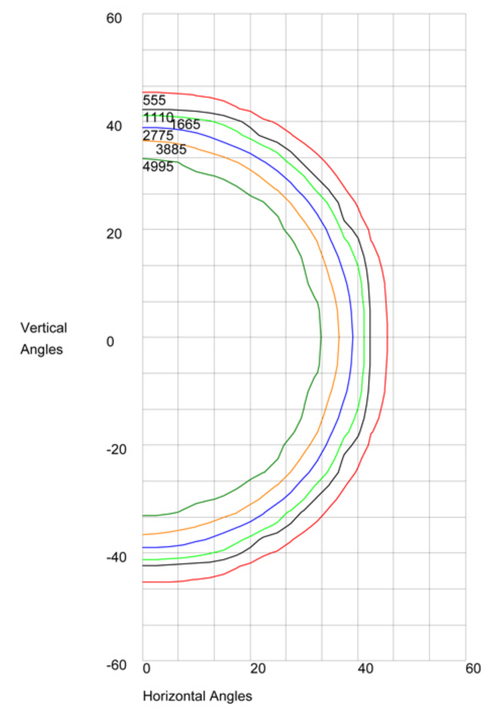

Maximum Candela = 5550 Located At Horizontal Angle =-5, Vertical Angle =-1
50% Maximum Candela = 2775
10% Maximum Candela = 555

IES FLOOD REPORT
PHOTOMETRIC FILENAME : L101404101R01.IES

AXIAL CANDELA

DEG.	HOR.	DEG.	VERT.
90	0	90	0
85	36	85	36
75	50	75	50
65	78	65	78
55	119	55	119
47.5	235	47.5	235
42.5	1025	42.5	1025
37.5	3532	37.5	3532
33	5168	33	5168
29	5310	29	5310
25.5	5221	25.5	5221
22.5	5154	22.5	5154
19.5	5198	19.5	5198
17	5270	17	5270
15	5342	15	5342
13	5395	13	5395
11	5440	11	5440
9	5493	9	5493
7	5544	7	5544
5	5550	5	5550
3	5544	3	5544
1	5516	1	5516
0	5496	0	5496
-1	5516	-1	5516
-3	5544	-3	5544
-5	5550	-5	5550
-7	5544	-7	5544
-9	5493	-9	5493
-11	5440	-11	5440
-13	5395	-13	5395
-15	5342	-15	5342
-17	5270	-17	5270
-19.5	5198	-19.5	5198
-22.5	5154	-22.5	5154
-25.5	5221	-25.5	5221
-29	5310	-29	5310
-33	5168	-33	5168
-37.5	3532	-37.5	3532
-42.5	1025	-42.5	1025
-47.5	235	-47.5	235
-55	119	-55	119
-65	78	-65	78
-75	50	-75	50
-85	36	-85	36
-90	0	-90	0

Pendant House Light
65° Beam Angle

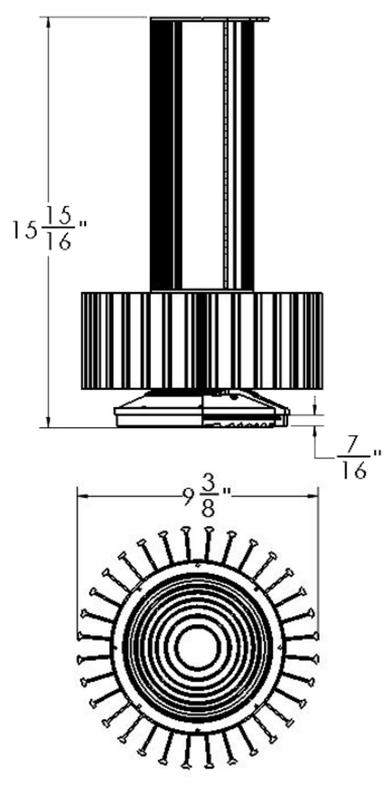

IES FLOOD REPORT
PHOTOMETRIC FILENAME : L111403902.IES

AXIAL CANDELA DISPLAY

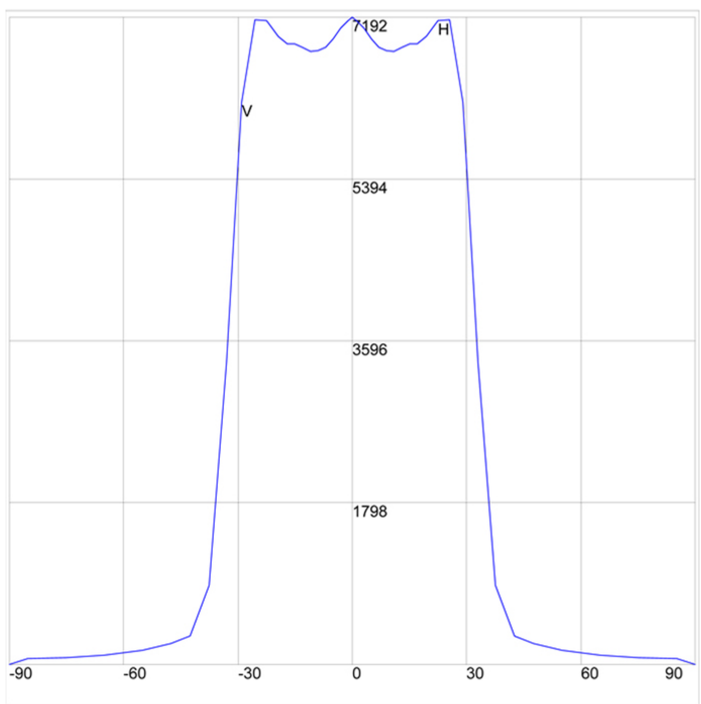

Maximum Candela = 7192 Located At Horizontal Angle = 0, Vertical Angle = 0
H - Horizontal Axial Candela
V - Vertical Axial Candela

IES FLOOD REPORT
PHOTOMETRIC FILENAME : L111403902.IES

ISOCANDELA CURVES

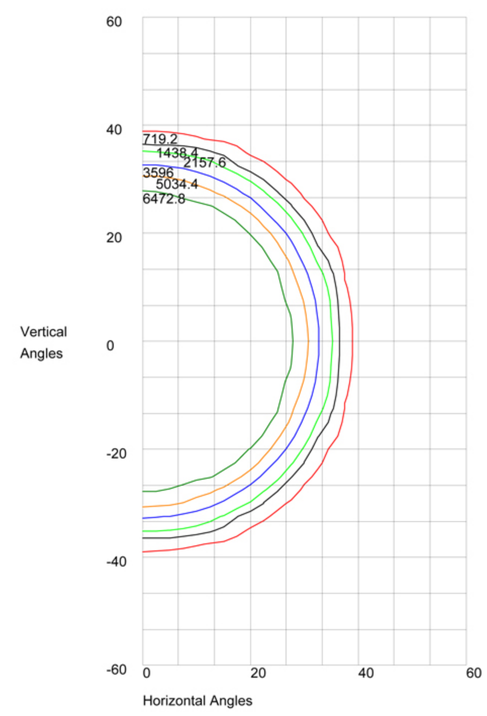

Maximum Candela = 7192 Located At Horizontal Angle = 0, Vertical Angle = 0
50% Maximum Candela = 3596
10% Maximum Candela = 719.2

IES FLOOD REPORT
PHOTOMETRIC FILENAME : L111403902.IES

AXIAL CANDELA

DEG.	HOR.	DEG.	VERT.
90	0	90	0
85	69	85	69
75	74	75	74
65	104	65	104
55	158	55	158
47.5	232	47.5	232
42.5	317	42.5	317
37.5	888	37.5	888
33	3366	33	3366
29	6246	29	6246
25.5	7163	25.5	7163
22.5	7159	22.5	7159
19.5	6979	19.5	6979
17	6895	17	6895
15	6892	15	6892
13	6860	13	6860
11	6808	11	6808
9	6817	9	6817
7	6862	7	6862
5	6951	5	6951
3	7070	3	7070
1	7158	1	7158
0	7192	0	7192
-1	7158	-1	7158
-3	7070	-3	7070
-5	6951	-5	6951
-7	6862	-7	6862
-9	6817	-9	6817
-11	6808	-11	6808
-13	6860	-13	6860
-15	6892	-15	6892
-17	6895	-17	6895
-19.5	6979	-19.5	6979
-22.5	7159	-22.5	7159
-25.5	7163	-25.5	7163
-29	6246	-29	6246
-33	3366	-33	3366
-37.5	888	-37.5	888
-42.5	317	-42.5	317
-47.5	232	-47.5	232
-55	158	-55	158
-65	104	-65	104
-75	74	-75	74
-85	69	-85	69
-90	0	-90	0

Pendant House Light
52° Beam Angle

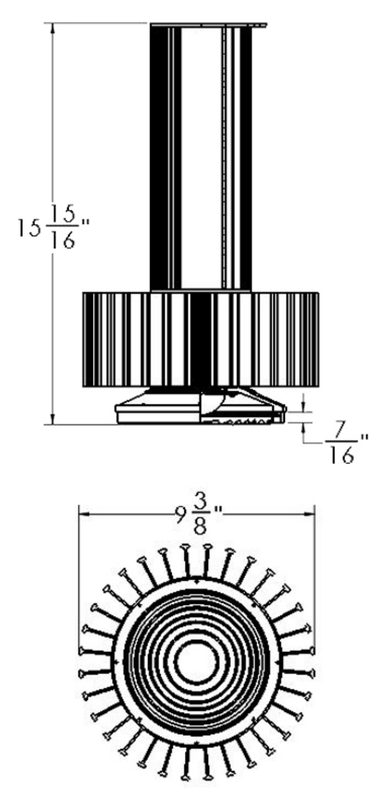

IES FLOOD REPORT
PHOTOMETRIC FILENAME : L101404102R01.IES

AXIAL CANDELA DISPLAY

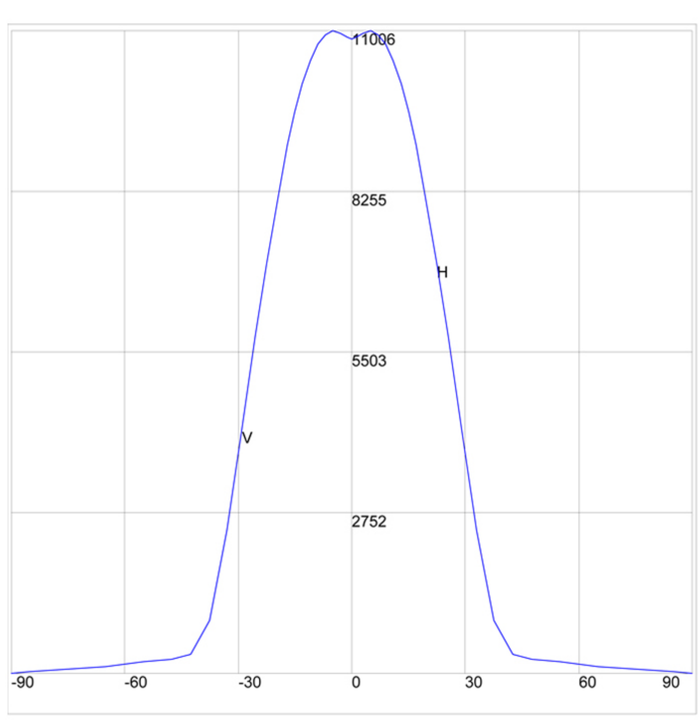

Maximum Candela = 11006 Located At Horizontal Angle =-5, Vertical Angle =-1
H - Horizontal Axial Candela
V - Vertical Axial Candela

IES FLOOD REPORT
PHOTOMETRIC FILENAME : L101404102R01.IES

ISOCANDELA CURVES

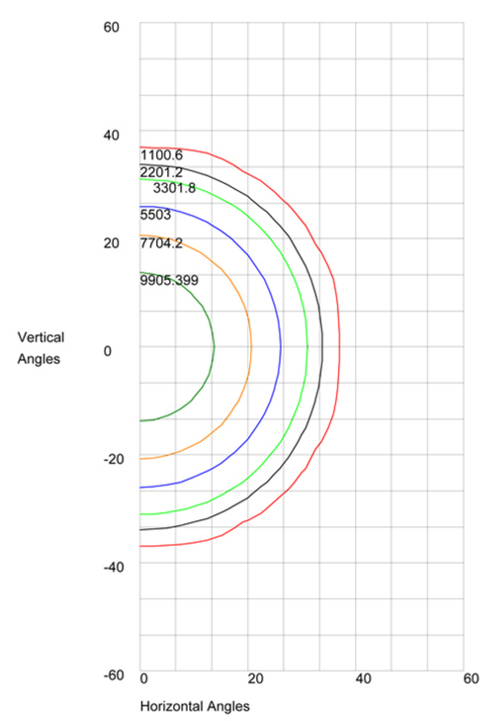

Maximum Candela = 11006 Located At Horizontal Angle =-5, Vertical Angle =-1
50% Maximum Candela = 5503
10% Maximum Candela = 1100.6

IES FLOOD REPORT
PHOTOMETRIC FILENAME : L101404102R01.IES

AXIAL CANDELA

DEG.	HOR.	DEG.	VERT.
90	0	90	0
85	42	85	42
75	74	75	74
65	118	65	118
55	202	55	202
47.5	253	47.5	253
42.5	338	42.5	338
37.5	920	37.5	920
33	2461	33	2461
29	4188	29	4188
25.5	5765	25.5	5765
22.5	7027	22.5	7027
19.5	8178	19.5	8178
17	9044	17	9044
15	9623	15	9623
13	10099	13	10099
11	10490	11	10490
9	10782	9	10782
7	10937	7	10937
5	11006	5	11006
3	10969	3	10969
1	10890	1	10890
0	10860	0	10860
-1	10890	-1	10890
-3	10969	-3	10969
-5	11006	-5	11006
-7	10937	-7	10937
-9	10782	-9	10782
-11	10490	-11	10490
-13	10099	-13	10099
-15	9623	-15	9623
-17	9044	-17	9044
-19.5	8178	-19.5	8178
-22.5	7027	-22.5	7027
-25.5	5765	-25.5	5765
-29	4188	-29	4188
-33	2461	-33	2461
-37.5	920	-37.5	920
-42.5	338	-42.5	338
-47.5	253	-47.5	253
-55	202	-55	202
-65	118	-65	118
-75	74	-75	74
-85	42	-85	42
-90	0	-90	0

PHOTOMETRIC DATA

THE LIGHT SOURCE INC

Pendant House Light
44° Beam Angle

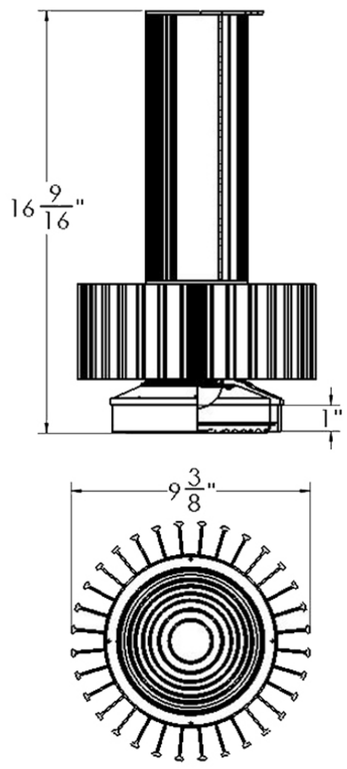

IES FLOOD REPORT
PHOTOMETRIC FILENAME : L111403501.IES

AXIAL CANDELA DISPLAY

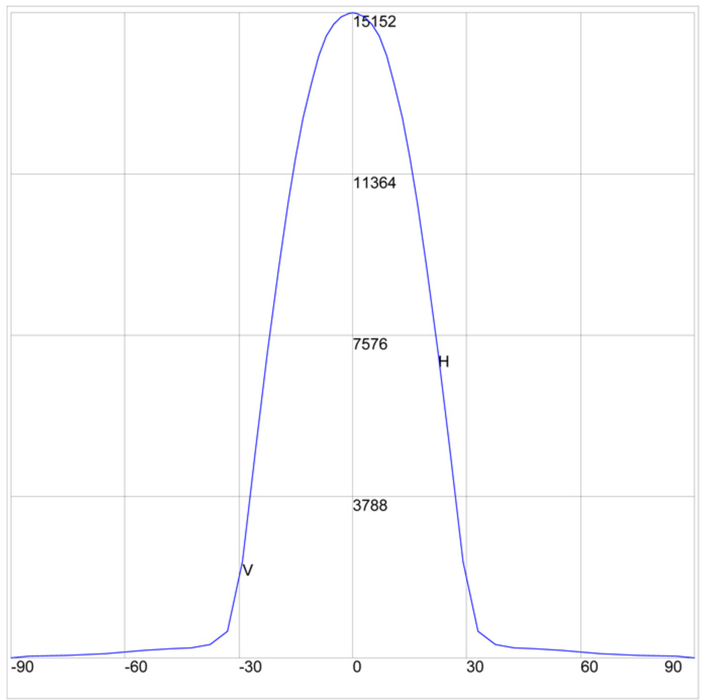

Maximum Candela = 15152 Located At Horizontal Angle = 0, Vertical Angle = 0
H - Horizontal Axial Candela
V - Vertical Axial Candela

IES FLOOD REPORT
PHOTOMETRIC FILENAME : L111403501.IES

ISOCANDELA CURVES

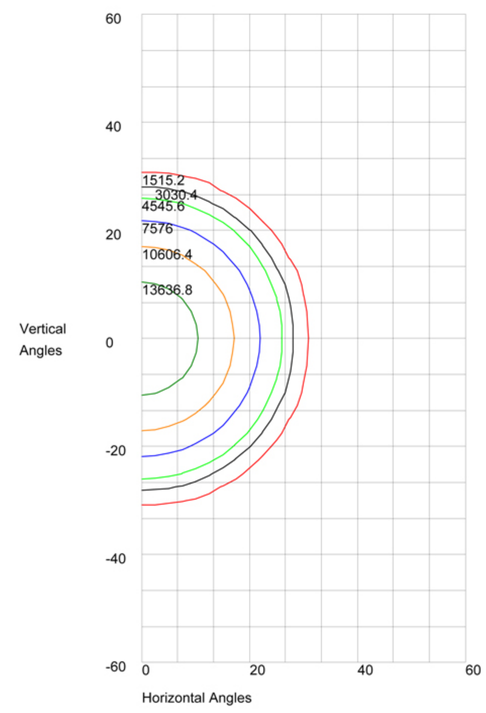

Maximum Candela = 15152 Located At Horizontal Angle = 0, Vertical Angle = 0
50% Maximum Candela = 7576
10% Maximum Candela = 1515.2

IES FLOOD REPORT
PHOTOMETRIC FILENAME : L111403501.IES

AXIAL CANDELA

DEG.	HOR.	DEG.	VERT.
90	0	90	0
85	45	85	45
75	71	75	71
65	108	65	108
55	185	55	185
47.5	233	47.5	233
42.5	249	42.5	249
37.5	328	37.5	328
33	635	33	635
29	2274	29	2274
25.5	4936	25.5	4936
22.5	7168	22.5	7168
19.5	9208	19.5	9208
17	10674	17	10674
15	11735	15	11735
13	12670	13	12670
11	13481	11	13481
9	14145	9	14145
7	14610	7	14610
5	14887	5	14887
3	15059	3	15059
1	15140	1	15140
0	15152	0	15152
-1	15140	-1	15140
-3	15059	-3	15059
-5	14887	-5	14887
-7	14610	-7	14610
-9	14145	-9	14145
-11	13481	-11	13481
-13	12670	-13	12670
-15	11735	-15	11735
-17	10674	-17	10674
-19.5	9208	-19.5	9208
-22.5	7168	-22.5	7168
-25.5	4936	-25.5	4936
-29	2274	-29	2274
-33	635	-33	635
-37.5	328	-37.5	328
-42.5	249	-42.5	249
-47.5	233	-47.5	233
-55	185	-55	185
-65	108	-65	108
-75	71	-75	71
-85	45	-85	45
-90	0	-90	0

Pendant House Light
36° Beam Angle

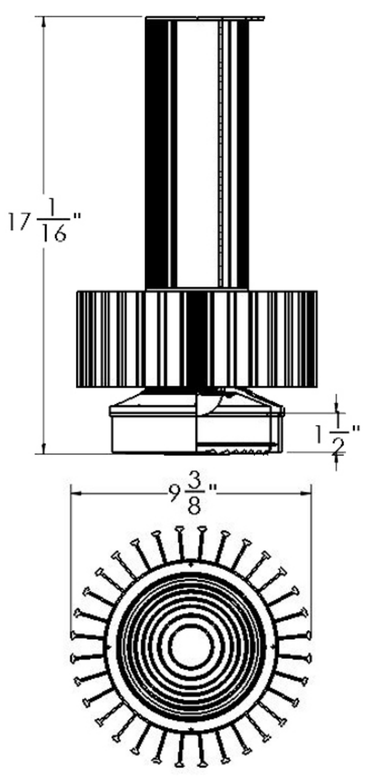

IES FLOOD REPORT
PHOTOMETRIC FILENAME : L101404104R01.IES

AXIAL CANDELA DISPLAY

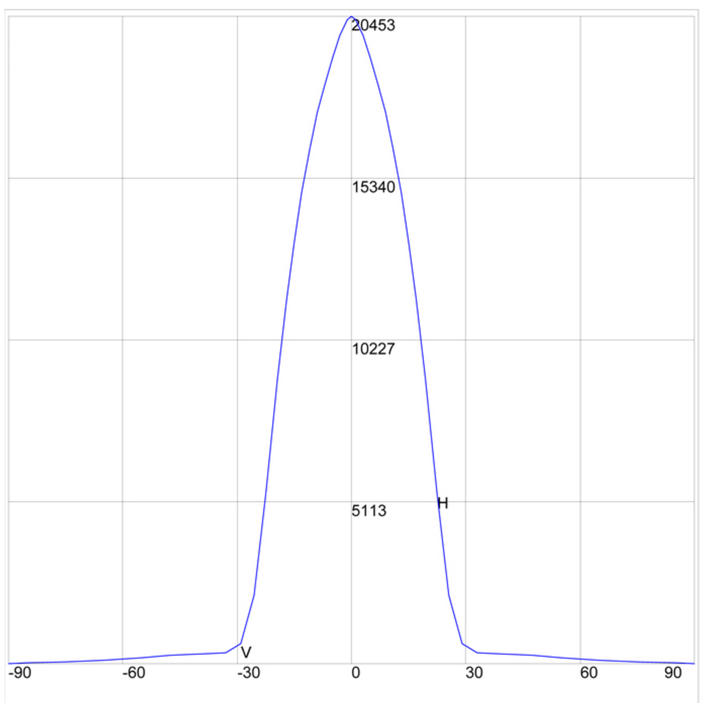

Maximum Candela = 20453 Located At Horizontal Angle = 0, Vertical Angle = 0
H - Horizontal Axial Candela
V - Vertical Axial Candela

IES FLOOD REPORT
PHOTOMETRIC FILENAME : L101404104R01.IES

ISOCANDELA CURVES

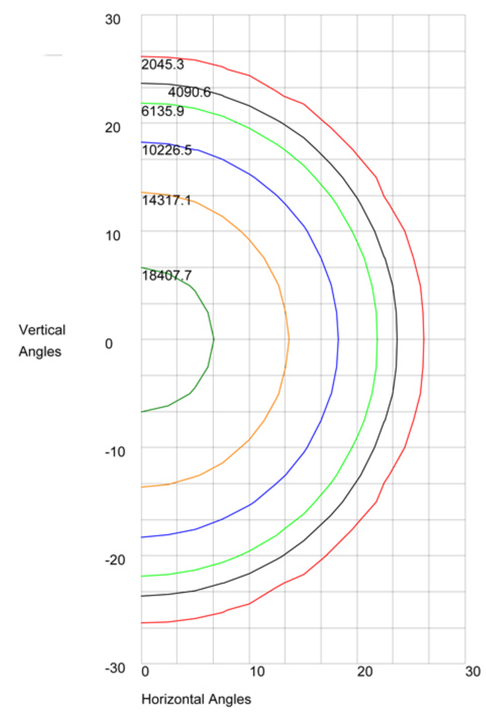

Maximum Candela = 20453 Located At Horizontal Angle = 0, Vertical Angle = 0
50% Maximum Candela = 10226.5
10% Maximum Candela = 2045.3

IES FLOOD REPORT
PHOTOMETRIC FILENAME : L101404104R01.IES

AXIAL CANDELA

DEG.	HOR.	DEG.	VERT.
90	0	90	0
85	46	85	46
75	69	75	69
65	117	65	117
55	206	55	206
47.5	275	47.5	275
42.5	315	42.5	315
37.5	323	37.5	323
33	345	33	345
29	651	29	651
25.5	2180	25.5	2180
22.5	5359	22.5	5359
19.5	9002	19.5	9002
17	11497	17	11497
15	13271	15	13271
13	14857	13	14857
11	16254	11	16254
9	17413	9	17413
7	18288	7	18288
5	19116	5	19116
3	19848	3	19848
1	20344	1	20344
0	20453	0	20453
-1	20344	-1	20344
-3	19848	-3	19848
-5	19116	-5	19116
-7	18288	-7	18288
-9	17413	-9	17413
-11	16254	-11	16254
-13	14857	-13	14857
-15	13271	-15	13271
-17	11497	-17	11497
-19.5	9002	-19.5	9002
-22.5	5359	-22.5	5359
-25.5	2180	-25.5	2180
-29	651	-29	651
-33	345	-33	345
-37.5	323	-37.5	323
-42.5	315	-42.5	315
-47.5	275	-47.5	275
-55	206	-55	206
-65	117	-65	117
-75	69	-75	69
-85	46	-85	46
-90	0	-90	0

Pendant House Light
30° Beam Angle

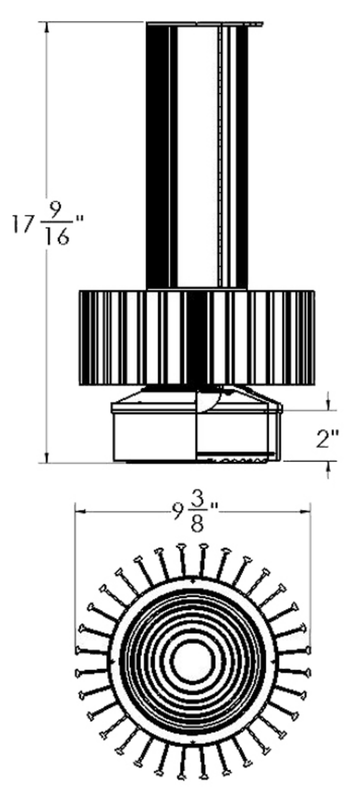

IES FLOOD REPORT
PHOTOMETRIC FILENAME : L101404105R01.IES

AXIAL CANDELA DISPLAY

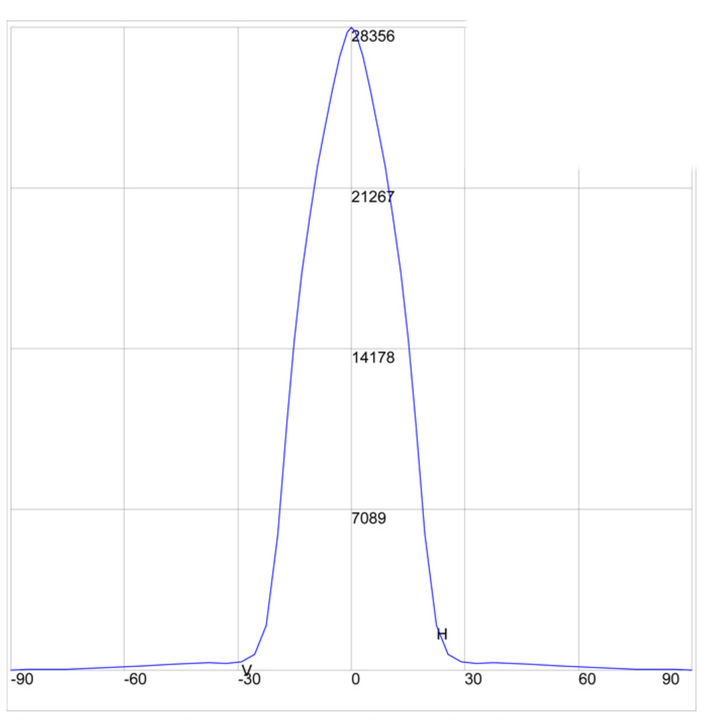

Maximum Candela = 28356 Located At Horizontal Angle = 0, Vertical Angle = 0
H - Horizontal Axial Candela
V - Vertical Axial Candela

IES FLOOD REPORT
PHOTOMETRIC FILENAME : L101404105R01.IES

ISOCANDELA CURVES

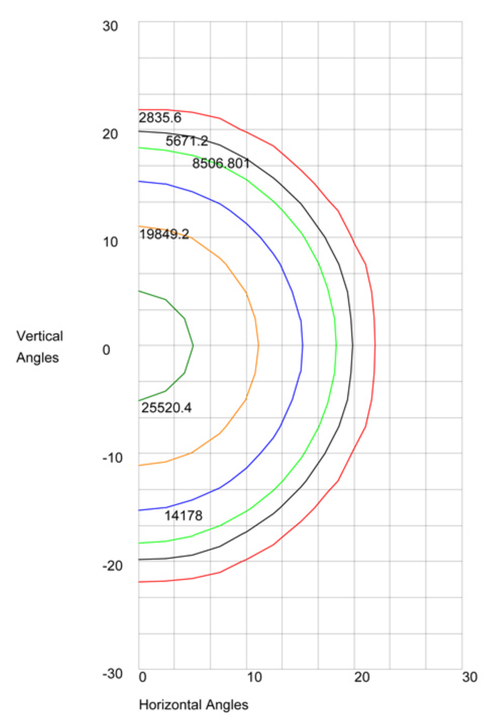

Maximum Candela = 28356 Located At Horizontal Angle = 0, Vertical Angle = 0
50% Maximum Candela = 14178
10% Maximum Candela = 2835.6

IES FLOOD REPORT
PHOTOMETRIC FILENAME : L101404105R01.IES

AXIAL CANDELA

DEG.	HOR.	DEG.	VERT.
90	0	90	0
85	44	85	44
75	63	75	63
65	109	65	109
55	200	55	200
47.5	273	47.5	273
42.5	320	42.5	320
37.5	339	37.5	339
33	316	33	316
29	377	29	377
25.5	710	25.5	710
22.5	2005	22.5	2005
19.5	6023	19.5	6023
17	10948	17	10948
15	14546	15	14546
13	17502	13	17502
11	20076	11	20076
9	22226	9	22226
7	23941	7	23941
5	25576	5	25576
3	27060	3	27060
1	28143	1	28143
0	28356	0	28356
-1	28143	-1	28143
-3	27060	-3	27060
-5	25576	-5	25576
-7	23941	-7	23941
-9	22226	-9	22226
-11	20076	-11	20076
-13	17502	-13	17502
-15	14546	-15	14546
-17	10948	-17	10948
-19.5	6023	-19.5	6023
-22.5	2005	-22.5	2005
-25.5	710	-25.5	710
-29	377	-29	377
-33	316	-33	316
-37.5	339	-37.5	339
-42.5	320	-42.5	320
-47.5	273	-47.5	273
-55	200	-55	200
-65	109	-65	109
-75	63	-75	63
-85	44	-85	44
-90	0	-90	0

E-mail: LED@thelightsource.com Web site: www.thelightsource.com Phone: 704-504-8399 Address: 3935 Westinghouse Blvd, Charlotte, NC 28273 [V150225]

PHOTOMETRIC DATA

THE LIGHT SOURCE INC

Pendant House Light
25° Beam Angle

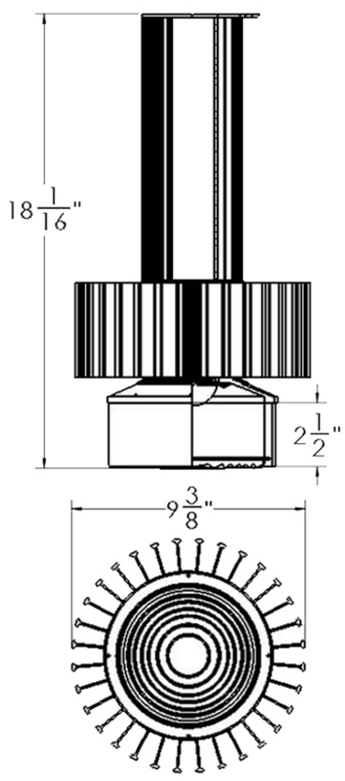

IES FLOOD REPORT
PHOTOMETRIC FILENAME : L101404106R01.IES

AXIAL CANDELA DISPLAY

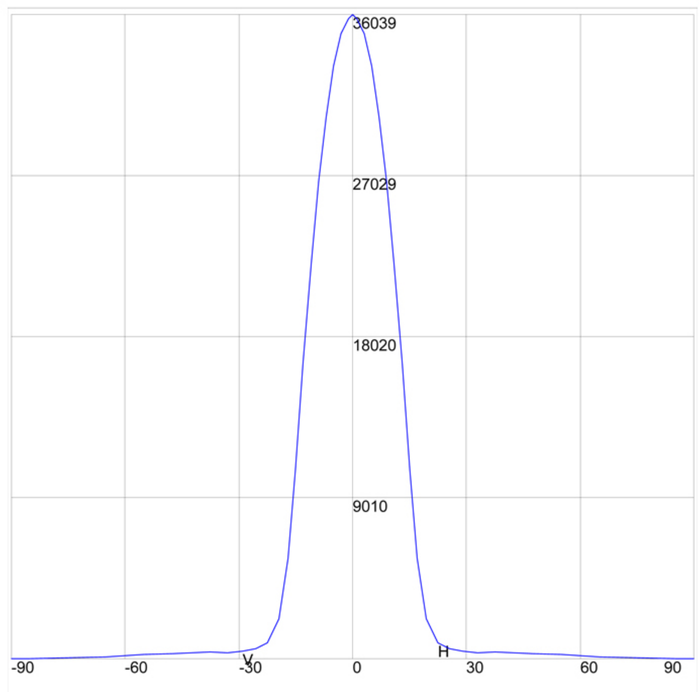

Maximum Candela = 36039 Located At Horizontal Angle = 0, Vertical Angle = 0
H - Horizontal Axial Candela
V - Vertical Axial Candela

IES FLOOD REPORT
PHOTOMETRIC FILENAME : L101404106R01.IES

ISOCANDELA CURVES

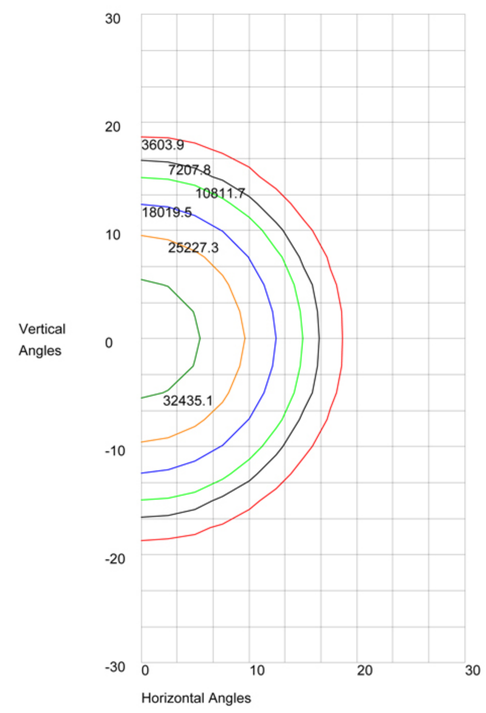

Maximum Candela = 36039 Located At Horizontal Angle = 0, Vertical Angle = 0
50% Maximum Candela = 18019.5
10% Maximum Candela = 3603.9

IES FLOOD REPORT
PHOTOMETRIC FILENAME : L101404106R01.IES

AXIAL CANDELA

DEG.	HOR.	DEG.	VERT.
90	0	90	0
85	42	85	42
75	70	75	70
65	133	65	133
55	243	55	243
47.5	307	47.5	307
42.5	355	42.5	355
37.5	394	37.5	394
33	352	33	352
29	419	29	419
25.5	590	25.5	590
22.5	925	22.5	925
19.5	2267	19.5	2267
17	5660	17	5660
15	10586	15	10586
13	16509	13	16509
11	22061	11	22061
9	26690	9	26690
7	30287	7	30287
5	33147	5	33147
3	34975	3	34975
1	35819	1	35819
0	36039	0	36039
-1	35819	-1	35819
-3	34975	-3	34975
-5	33147	-5	33147
-7	30287	-7	30287
-9	26690	-9	26690
-11	22061	-11	22061
-13	16509	-13	16509
-15	10586	-15	10586
-17	5660	-17	5660
-19.5	2267	-19.5	2267
-22.5	925	-22.5	925
-25.5	590	-25.5	590
-29	419	-29	419
-33	352	-33	352
-37.5	394	-37.5	394
-42.5	355	-42.5	355
-47.5	307	-47.5	307
-55	243	-55	243
-65	133	-65	133
-75	70	-75	70
-85	42	-85	42
-90	0	-90	0

Pendant House Light
20° Beam Angle

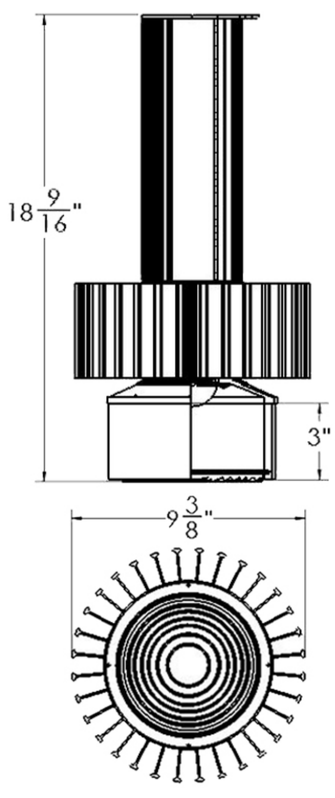

IES FLOOD REPORT
PHOTOMETRIC FILENAME : L111403502.IES

AXIAL CANDELA DISPLAY

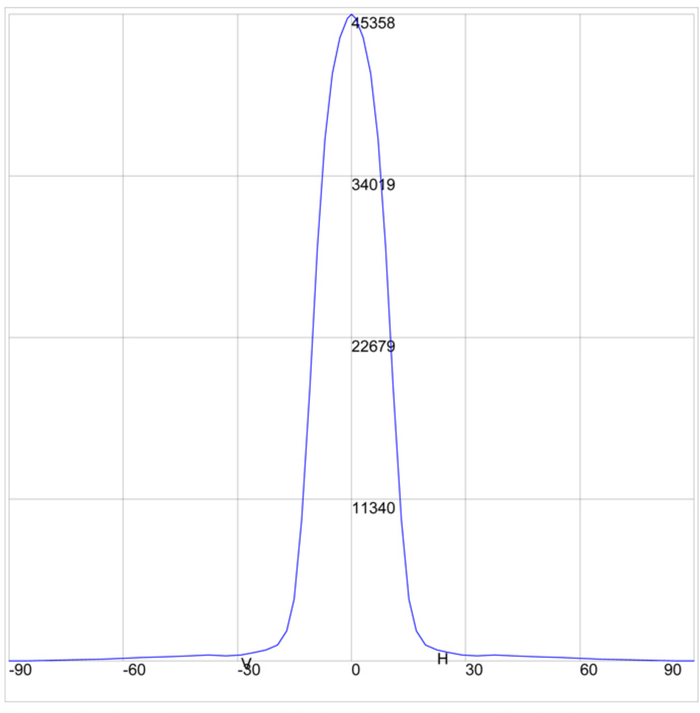

Maximum Candela = 45358 Located At Horizontal Angle = 0, Vertical Angle = 0
H - Horizontal Axial Candela
V - Vertical Axial Candela

IES FLOOD REPORT
PHOTOMETRIC FILENAME : L111403502.IES

ISOCANDELA CURVES

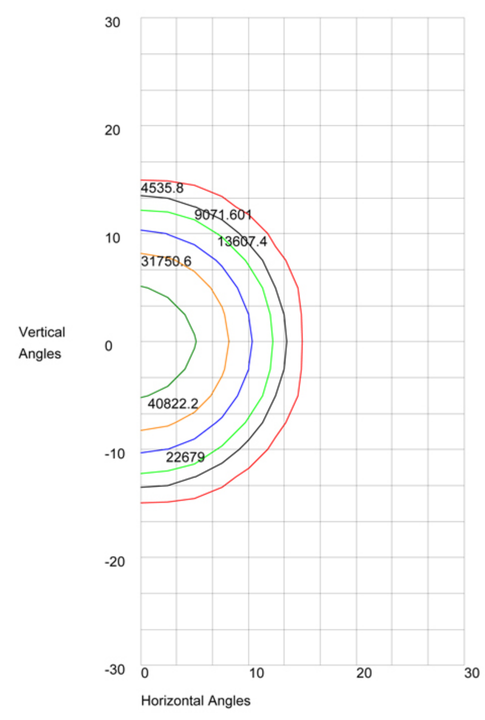

Maximum Candela = 45358 Located At Horizontal Angle = 0, Vertical Angle = 0
50% Maximum Candela = 22679
10% Maximum Candela = 4535.8

IES FLOOD REPORT
PHOTOMETRIC FILENAME : L111403502.IES

AXIAL CANDELA

DEG.	HOR.	DEG.	VERT.
90	0	90	0
85	45	85	45
75	78	75	78
65	156	65	156
55	258	55	258
47.5	302	47.5	302
42.5	362	42.5	362
37.5	431	37.5	431
33	397	33	397
29	449	29	449
25.5	587	25.5	587
22.5	766	22.5	766
19.5	1142	19.5	1142
17	2130	17	2130
15	4376	15	4376
13	9908	13	9908
11	19232	11	19232
9	29075	9	29075
7	36572	7	36572
5	41190	5	41190
3	43706	3	43706
1	45049	1	45049
0	45358	0	45358
-1	45049	-1	45049
-3	43706	-3	43706
-5	41190	-5	41190
-7	36572	-7	36572
-9	29075	-9	29075
-11	19232	-11	19232
-13	9908	-13	9908
-15	4376	-15	4376
-17	2130	-17	2130
-19.5	1142	-19.5	1142
-22.5	766	-22.5	766
-25.5	587	-25.5	587
-29	449	-29	449
-33	397	-33	397
-37.5	431	-37.5	431
-42.5	362	-42.5	362
-47.5	302	-47.5	302
-55	258	-55	258
-65	156	-65	156
-75	78	-75	78
-85	45	-85	45
-90	0	-90	0

CRI & CCT

x	0.4369
y	0.4047
u'	0.2503
v'	0.5216
CRI	82.50
CCT	3005
Duv	0.00025

R Values

R1	81.02
R2	89.21
R3	95.65
R4	81.05
R5	80.12
R6	85.63
R7	84.87
R8	62.21
R9	12.45
R10	74.12
R11	79.21
R12	66.69
R13	82.74
R14	97.16

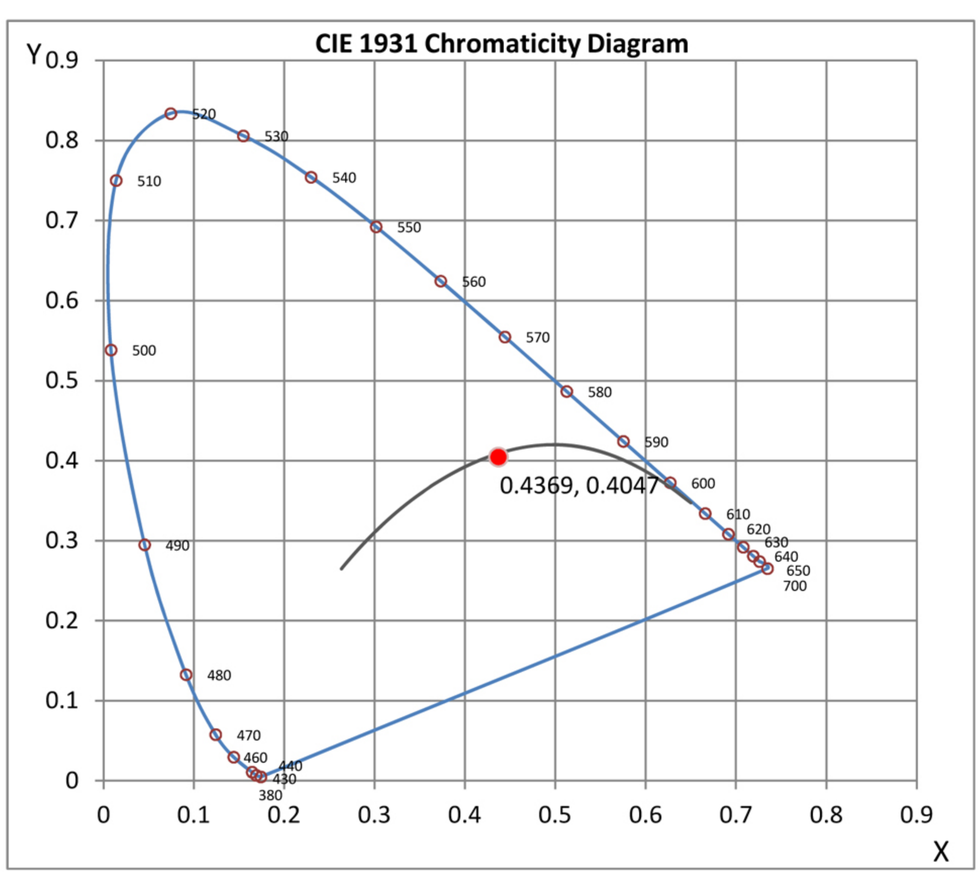

LIGHT LABORATORY INC.

Independent testing data provided by Light Laboratory, Inc.

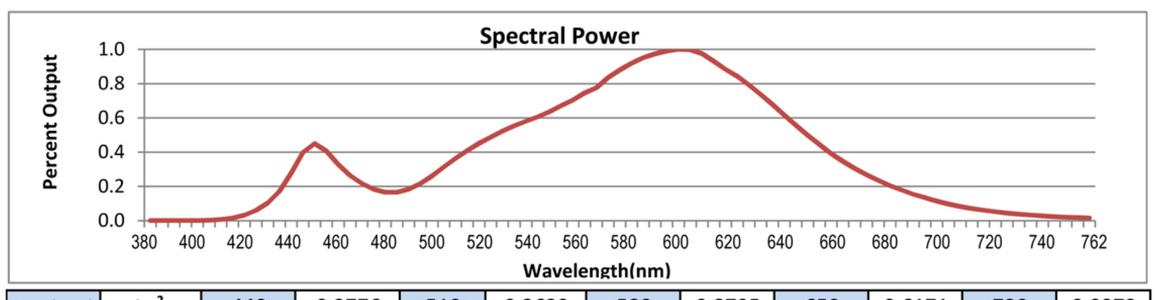

Wavelength	W/m²nm	440	0.2776	510	0.3632	580	0.8795	650	0.6171	720	0.0972
380	0.0009	450	0.4503	520	0.4515	590	0.9511	660	0.4991	730	0.0714
390	0.0009	460	0.3287	530	0.5231	600	0.9894	670	0.3929	740	0.0526
400	0.0019	470	0.2178	540	0.5815	610	0.9969	680	0.3063	750	0.0387
410	0.0072	480	0.1661	550	0.6367	620	0.9310	690	0.2356	760	0.0283
420	0.0325	490	0.1838	560	0.7045	630	0.8424	700	0.1790	770	0.0211
430	0.1037	500	0.2621	570	0.7760	640	0.7363	710	0.1347	780	0.0157

E-mail: LED@thelightsource.com Web site: www.thelightsource.com Phone: 704-504-8399 Address: 3935 Westinghouse Blvd, Charlotte, NC 28273 [V150225]

DMX Control

DMX CONNECTOR WIRING INSTRUCTIONS
It is essential to take the time to ensure that all DMX connections are done properly the first time. It is difficult and time consuming to find DMX wiring errors after the installation is complete.

The DMX-512 cable terminations must have the jacket carefully removed without damaging or nicking the insulation of the individual conductors inside the cable. Only the three wires that are to be connected should extend one inch past the cable jacket. Any other conductors and the shield in the cable should be trimmed flush with the jacket and completely encased with heat shrink or tightly wrapped electrical tape. This will keep the non-data conductors and shield from possibly shorting the DMX signal or shorting something on the dimmer board.

ESSENTIAL DMX PROCEDURES
All DMX wiring must be daisy chained--run from the controller to the first fixture, from the first fixture to the second fixture, from the second fixture to the third fixure, etc.

No DMX wiring may use twofers or wiring configurations made in a star, tee, or Y. The DMX cable should be a continuous run between DMX devices with no splicing and should be grounded only at the console, never further in the daisy chain.

Data plus and data minus cannot be interchanged anywhere in the DMX system.

A practical maximum DMX daisy chain length with 24 guage DMX cable is 1000 feet (one 1000' spool).

Use one DMX Opto-Splitter with as many DMX outputs required to provide additional DMX daisy chains.

The last DMX device on each DMX daisy chain must be terminated. The Light Source fixtures use switch 4 in the "ON" position to terminate the DMX data plus and data minus signals. Only the last fixture on the DMX daisy chain should be terminated.

DMX cable must meet the RS485 standards, (or the Cat 5 standards if double shielded CAT 5 cable is installed in metallic conduit).

Bizarre system operation will result from failing to observe these rules!

SYSTEM DMX WIRING CABLE REQUIREMENTS
Proper DMX wiring is critical to a satisfactory working lighting system. Do not cut corners on the DMX wiring. The system can only perform as well as the onsite DMX wiring installation will allow. The DMX-512 digital control signal turns on and off up to a quarter of a million times a second. Because of these rapid electrical current changes, exacting methods must be followed and special cable types are required for the DMX system to work properly. The longer the total distance the DMX control signal runs, the more critical it is that the proper cable is used. DMX512 uses the RS485 standards for data communication cable. All DMX512 cable used for the installation must meet these standards.

Only one twisted pair of signal conductors is required to run the fixture. Some DMX cables have more than one twisted pair, which makes more work to complete the installation. The Light Source can provide an excellent DMX cable with a double shield, drain wire, and a single 120 Ohm impedance low capacitance twisted wire pair. This cable will save installation time. A partial list of other manufacturer's cable types that meet the DMX requirements are: Belden 9729, 9829, and TMB Proplex.

CAT 5 cables have four 100 Ohm impedance low capacitance twisted data pairs and have been proven by a leading industry group to properly distribute DMX when correctly installed in permanent installations using metallic conduit as a protective shield. CAT 5 STP (shielded twisted pair) with double shielding cable may be used if installed inside metal conduit. CAT 5 cable is best connected with IDC style connectors.

IMPORTANT NOTES
The 120 Ohm termination resistor at the end of the daisy chain stops the electronic control signal from bouncing back down the DMX line and mixing with the incoming DMX signal, confusing the DMX receivers and causing havoc with proper control of DMX system.

DMX receiving devices have male XLR plugs. DMX transmitters have female XLR connectors. RJ45 connectors may be used for permanent DMX wiring cable terminations only.

WARNING
Accidental connection of RJ45 connectors to non-DMX512 equipment my result in serious damage to the Light Source equipment. Both Power over Ethernet (POE), and Telecom (phone ringing), have voltages that are above the DMX-512 limits on pins 4 and 5. Some lighting manufacturers also have proprietary DMX distribution systems that have voltages that are above the DMX-512 limits on RJ45 pins 4 and 7. Because of these various uses, plugging unlike systems could cause serious damage. For example, Do not run The Light Source fixtures on a Color Kinetics control daisy chain.

System DMX Riser

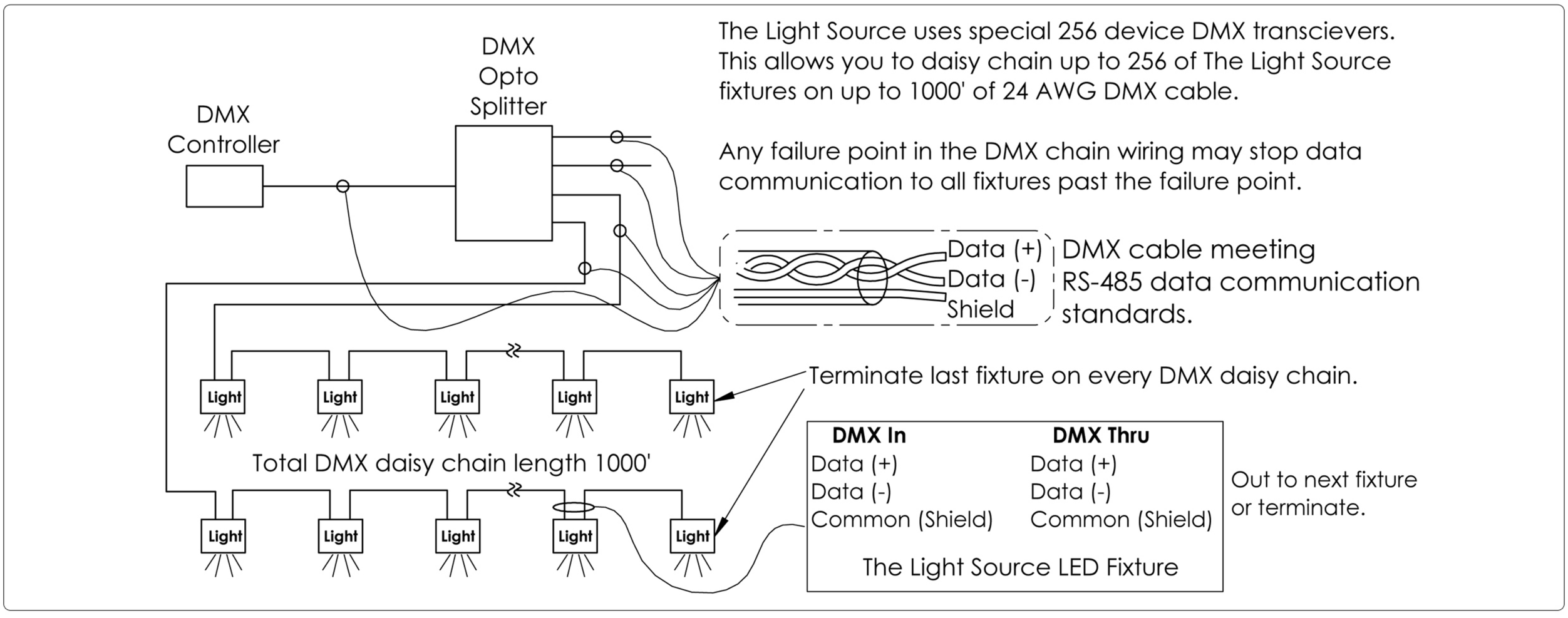

E-mail: LED@thelightsource.com Web site: www.thelightsource.com Phone: 704-504-8399 Address: 3935 Westinghouse Blvd, Charlotte, NC 28273 [V150225]

DMX Control

THE LIGHT SOURCE INC

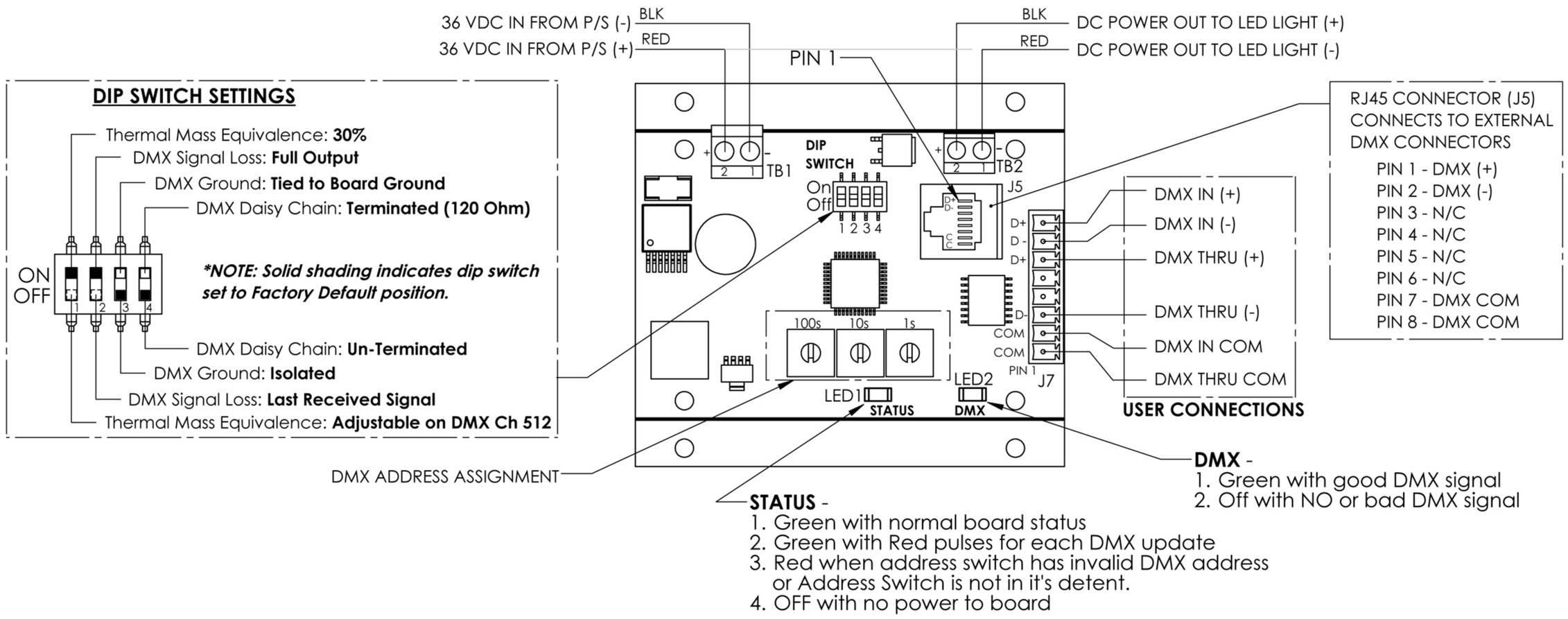

FIXTURE ADDRESS SETTING

The Light Source recommends that each fixture be given an invidual DMX address to maximize the sysem flexibility. However, if you have channel limitations you may group lights on the same DMX address without any harm to the system.

To set the fixture DMX address, use the 3 rotary switches labeled 100's, 10's, and 1's.Use your fingers or a small screw driver to rotate the selector switch to the desired address. The notch that runs down the post, or the arrow, should point to the DMX address number desired. It is important that each rotary switch is fully clicked into the number detent. There is a definite detent for each number that can be felt as the numbers are set. If any of the DMX address rotary switches are in betweeen detents, then the board will indicate a DMX error by changing the Status LED indicator from its normal green to red. The Status LED is labeled LED 1.

The 100's switch sets the 100's digit, the 10's switch sets the 10's digit, and the 1's switch sets the 1's digit. For example: DMX address 358 has the 100's switch set to 3; the 10's switch set to 5 and the 1's switch set to 8.

DIP SWITCH SETTINGS

"ON" is the up position, away from the address selectors. Use only a small screwdriver to move the switch horizontally. Do NOT press down on the switch, or press at an angle.

DIP SWITCH SETTINGS — Factory Default Setting

Switch 1	ON	Sets Thermal Mass Equivalence at factory default of 30%	ON
Switch 1	OFF	Allows Thermal Mass Equivalence to be adjustable on Channel 512	ON
Switch 2	ON	Sets Fixture to default to full output with DMX signal loss	ON
Switch 2	OFF	Sets fixture to maintain last received signal with DMX loss	ON
Switch 3	ON	Ties Board ground to DMX common through a 10K Ohm resistor	OFF
Switch 3	OFF	Isolates board ground from DMX common	OFF
Switch 4	ON	Terminates the DMX daisy chain with a 120 Ohm resistor	OFF
Switch 4	OFF	Leaves the DMX data unterminated	OFF

The last fixture on each DMX 512 daisy chain must be terminated by turning switch 4 ON

DMX WIRING ON FIXTURE DIMMER BOARD FOR SCREW TERMINAL OR IDC CONNECTORS

Pin #	DMX Function	Cat 5 Wire Color
1	Data In +	Orange/White
2	Data In -	Orange
3	Data Through +	Orange/White
4	Not Used	
5	Not Used	
6	Data Through -	Orange
7	Data in Common	Shield/Common
8	Data Through Common	Shield/Common

XLR WIRING

5 PIN XLR Pin #		3 PIN XLR Pin #	
1	Common	1	Common
2	DMX 1 Data -	2	Data -
3	DMX 1 Data +	3	Data +
4	DMX 2 Data -		
5	DMX 2 Data +		

DMX Connector Wiring

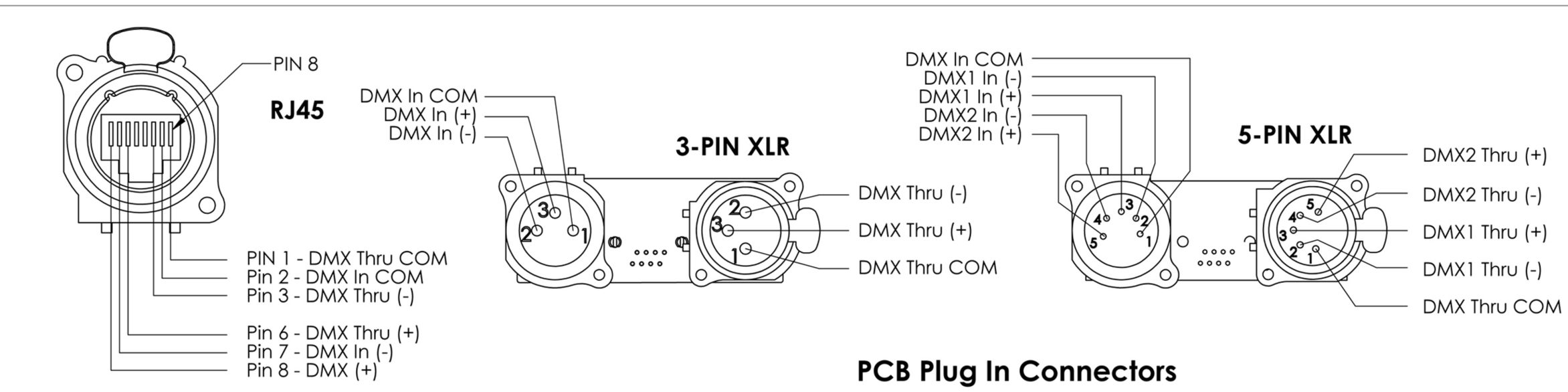

PCB Plug In Connectors

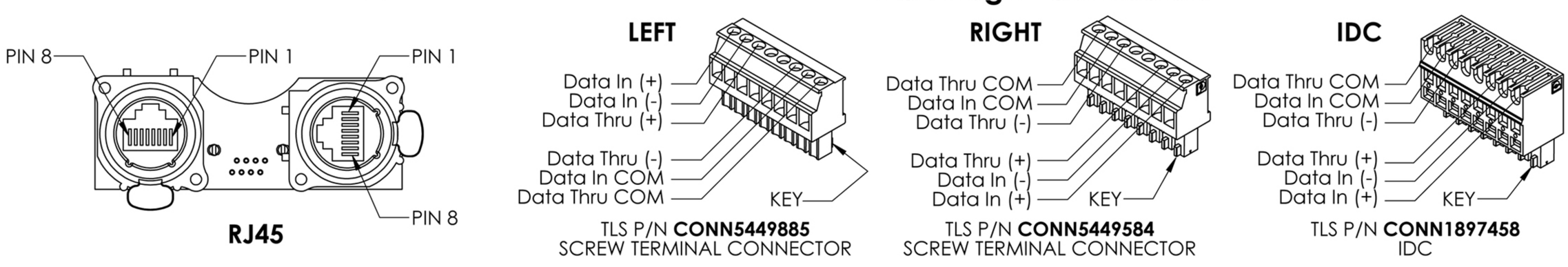

E-mail: LED@thelightsource.com Web site: www.thelightsource.com Phone: 704-504-8399 Address: 3935 Westinghouse Blvd, Charlotte, NC 28273 [V150225]